advanced media technologies®

MDU Solutions®

Patent Pending

DVIS Nano Digital Insertion (DVISn) - RF Output:

Features:

- The Nano is the most cost-effective solution within the DVIS line of products for inserting locally generated content (e.g. security camera, localized advertising) to an MDU in digital format (MPEG-2 / QAM)
- Ideal for applications requiring a low-cost, basic solution for insertion into a blank QAM or at the spectrum edge
- Extremely compact & wall mountable form factor fits into virtually any space
- Fully integrated audio/video encoders, multiplexer & QAM modulator/RF upconverter
- Available in 1 or 2 channel configurations (1 or 2 baseband CVBS inputs)
- Features support MPEG-2 encoding
- HTTP based GUI allows for easy set-up & control using a standard web browser

DVNANO2 (front view)

DVNANO2 (rear view)

DVNANO1 (front view)

DVNANO1 (rear view)

Functional Schematic

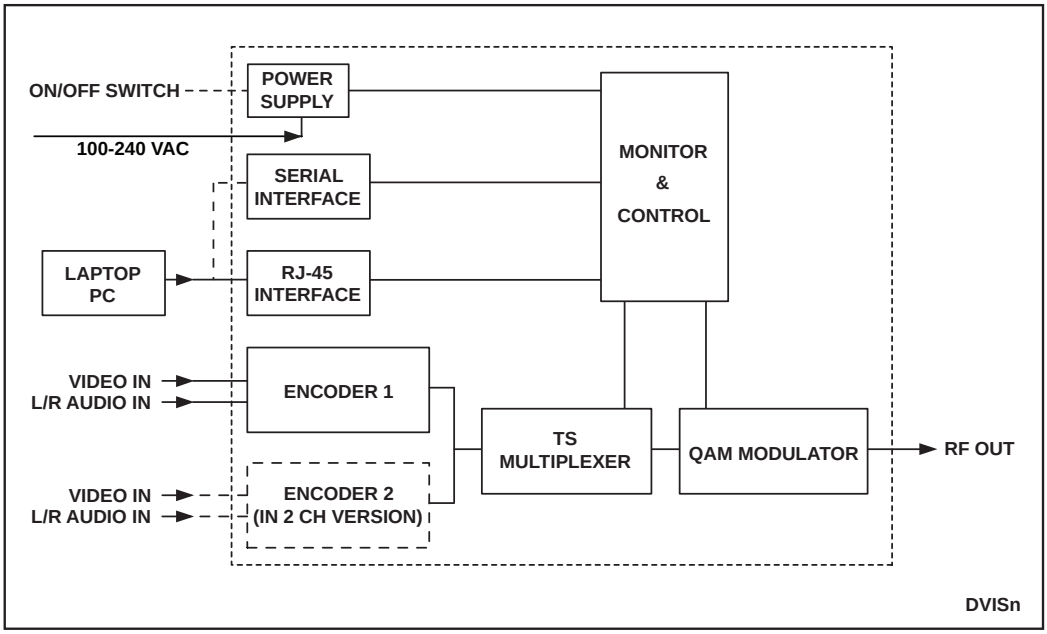

Specifications subject to change without notice.

MDU Solutions

Patent Pending

DVIS Nano Digital Insertion (DVISn) - RF Output:

DVISn - RF Output Specifications

PLATFORM SPECIFICATIONS	DVNANO1 & DVNANO2	DVNANO1E & DVNANO2E
CHASSIS OVERVIEW		
SIZE	2.3"H x 8.8"W x 4.8"D (5.84H x 22.35W x 12.19D cm), Wall Mount	
ENCODED PROGRAMS	1 or 2 Programs into 1 QAM Channel	
POWER SUPPLY	IEC Connector / 110-220 VAC, 50/60Hz	
POWER CONSUMPTION	25W Max.	
DEVICE MANAGEMENT	HTTP over Ethernet Network Interface (RJ45)	
OPERATING TEMPERATURE	0°C to +50°C (+32°F to +122°F)	
HUMIDITY	0 to 95% (without condensation)	
TS MULTIPLEXER		
PACKET SIZE	188 Bytes	
TS SUPPORT	QBA, AF	
PROGRAM NUMBER & TS NUMBER	User Settable (Program #: 1-65535; TS ID: 1-65535)	
PSI / SI INFORMATION TABLE (PAT, PMT)	Automatically Generated	
SETTABLE PIDs	PMT, PCR (0x0015-0x1FFE; dec. 21-8190)	
QAM MODULATOR / RF UPCONVERTER		
QAM MODULATION	ITU-T J.83 Annex B	ITU-T J.83 Annex A/C
MODULATION FORMAT	64, 256 QAM	16, 32, 64, 128, 256 QAM
RF QAM OUTPUT POWER AT RF OUT	42 to 55 dBmV	
ATTENUATION STEP SIZE	1 dB	
RF QAM FREQUENCY OUTPUT RANGE	57-860 MHz	
SUPPORTED CHANNEL PLANS	Standard, HRC, IRC	--
FREQUENCY STEP	1 kHz	
RF QAM CHANNEL BANDWIDTH	6 MHz	3 - 8 MHz
EXCESS BANDWIDTH	12% (256QAM), 18% (64QAM)	15% (Annex A), 13% (Annex C)
SYMBOL RATE	5.360537 MSymb/s - 256QAM 5.056941 MSymb/s - 64QAM	2608 ksps - 3 MHz 3478 ksps - 4 MHz 4347 ksps - 5 MHz 5217 ksps - 6 MHz 6086 ksps - 7 MHz 6956 ksps - 8 MHz User Defined - max. 7MSymb/s
MER EQUALIZED(1)	> 40 dB(1)	
FREQUENCY OFFSET	< 2ppm	
SYMBOL RATE OFFSET	< +/- 50 Hz	
CARRIER SUPPRESSION	> 55 dB	
SIGNAL/NOISE	> 45 dB	
SPURIOUS	-60 dB	
TS PROCESSING	Null Packet Insertion & PCR Correction	
FEC	ITU-T J.83 Annex B	ITU-T J.83 Annex A/C
RF INTERFACES		
RF OUT	F, 75 Ohm	
RF OUT RETURN LOSS	> 16 dB	
ENCODER VIDEO SPECIFICATIONS		
INPUT	CVBS, NTSC	CVBS, PAL
INPUT INTERFACE	1 x BNC, 75 Ohm (x 2 on Dual Channel Version)	
ENCODING FORMAT	MPEG2, 4:2:0, MP@ML	
ENCODING BIT RATE TYPE	CBR	
VIDEO ADJUSTMENTS	Brightness, Contrast, Saturation	
VIDEO PROCESSING	TBC	
SUPPORTED RESOLUTIONS	704x480, 544x480, 528x480, 480x480 and 352x480	704x576, 544x576, 528x576, 480x576 and 352x576
FRAME RATE	29.97 fps	25 fps
VIDEO ENCODING BIT RATE	1000 to 4000 kbps	
GOP STRUCTURE	IBBP - length 15	
VIDEO PID SETTING	21 - 8190	
ENCODER AUDIO SPECIFICATIONS		
INPUT	Analog Unbalanced	
INPUT INTERFACE	RCA (L, R) (x 2 on Dual Channel Version)	
ENCODING FORMAT(2)	Dolby Digital AC-3(2)	MPEG1 Layer II
SAMPLING RATE	48 kHz	
ENCODING BIT RATES	192 & 256 kbps	
AUDIO PID SETTINGS	21 - 8190	

NOTES:
(1) Measured with Rohde & Schwarz EFA (FW Ver 05.33).
(2) Dolby is a trademark of Dolby Laboratories. Manufactured under license from Dolby Laboratories.

Ordering Information

Part Number	Description
DVNANO1	Single Channel Encoder Nano Digital A/V Insertion Unit
DVNANO2	Dual Channel Encoder Nano Digital A/V Insertion Unit
DVNANO1E	Single Channel Encoder Nano Digital A/V Insertion Unit DVB
DVNANO2E	Dual Channel Encoder Nano Digital A/V Insertion Unit DVB
DNFAN	Replacement/Spare Fan for DVISn

ATX

ISO 9001 REGISTERED

Specifications subject to change without notice.

www.amt.com

AMT advanced media technologies

Advanced Media Technologies, Inc. · 3150 SW 15th Street Deerfield Beach, FL 33442
(888) 293-5856 · (954) 427-5711 · Fax (954) 427-9688